INSTALLATION, CONNECTION AND SETTING OF THE iKS2 UNIT CONTROLLER AND iKSW2 WALL-MOUNTED CONTROLLER FOR OPERATION IN A MODBUS RTU SERIAL NETWORK

WARNINGS

⚠ Follow the sequences described in the various paragraphs for quick and correct assembly of the components.

⚠ Installation must be carried out by qualified personnel using the necessary personal protective equipment.

⚠ Document reserved in accordance with law. No reproduction or disclosure to third parties without the express authorisation of the company.

DESCRIPTION OF THE IKS2 CONNECTIONS

The +AB- terminal block is used to connect the electronic board in the iKS2 control panels to a “Modicon ModBus” RTU serial communication network.

⚠ For correct operation of the ModBus RTU serial connection, make sure that the jumper is in position “RTU”.

A iKS2 unit controller electronic board

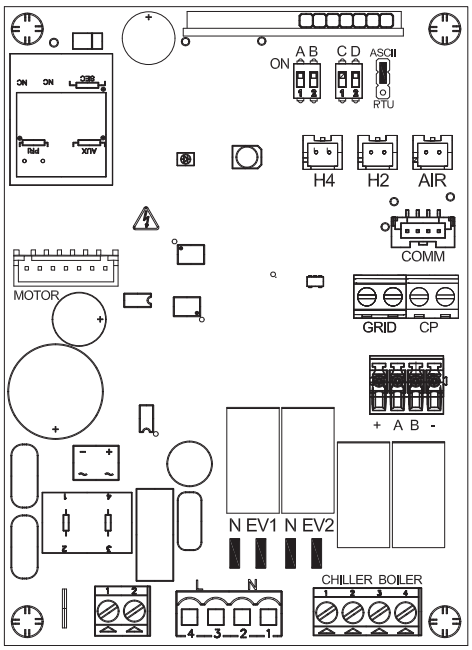

ELECTRICAL CONNECTIONS

Preliminary warnings

⚠ Before carrying out any operations:
- disconnect the appliance from the mains power supply by moving the main system switch to “OFF”
- wait until the components have cooled down, to avoid the danger of burns

⚠ Make sure power is not present before proceeding.

⛔ Never perform any technical operations before having disconnected the unit from the mains power supply.

Access to the electronic board

To access the electrical connections area:
- follow the instructions shown in the appliance's installation manual

To access the electronic board:
- access the electrical connections area
- remove the screws from the electrical box cover
- remove the cover

A	Electrical box cover
B	Fixing screws
C	Electronic board

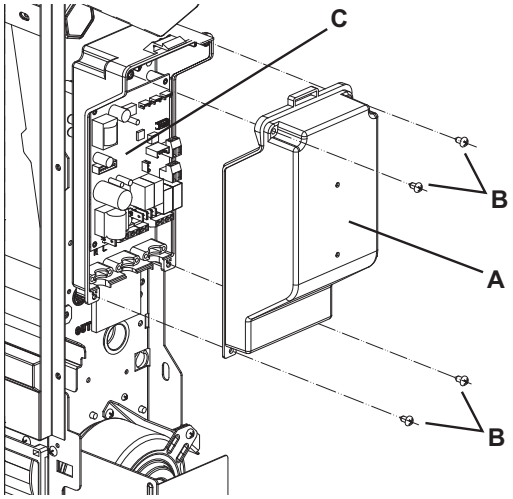

iKS2 electrical connections

To connect the electronic board to a "Modicon ModBus" RTU serial communication network:
- follow the instructions on the connection diagram
- connect to the ModBus connector as screen printed on the board
- make sure connections "A" and "B" are correct

⚠ For all other connections, refer to the diagrams and instructions provided in the installation manual.

+BA-	ModBus RTU serial connection
H2	Hot water temperature probe 10 k Ω
AIR	Air temperature probe
M1	Motore ventilatore DC inverter
CP	Occupancy sensor input
Y1	(N-EV 1) Water solenoid valve (230 V/50 Hz 1 A voltage output)
Y2	(N-EV 2) Flap connection (230 V/50 Hz 1 A voltage output)
L-N	230 V/50 Hz power connection
BO	Enable boiler output (voltage-free contact max 1 A)
CH	Enable chiller output (voltage-free contact max 1 A)

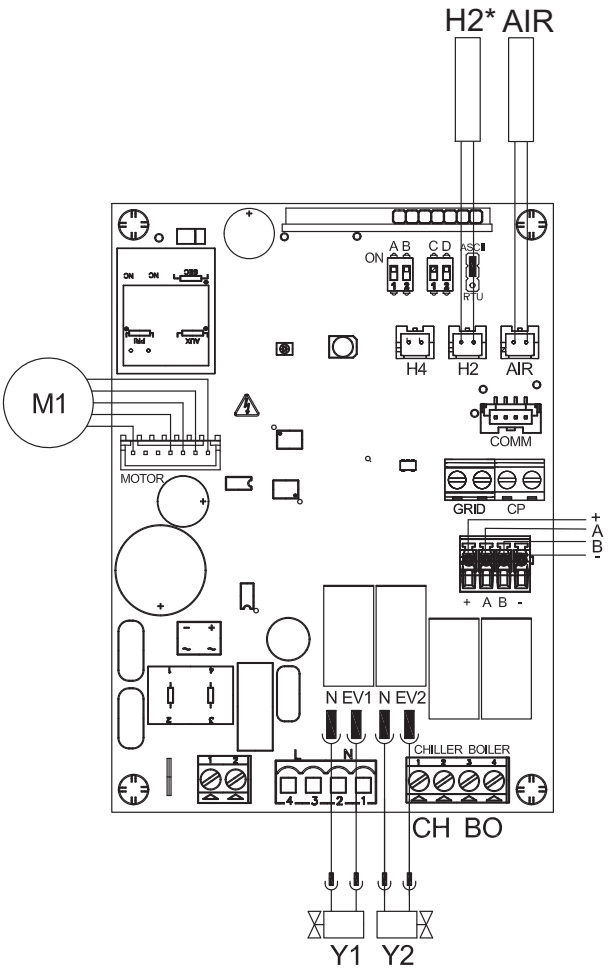

ELECTRICAL CONNECTIONS FROM iKSW2 TO iHBS2 BOARD

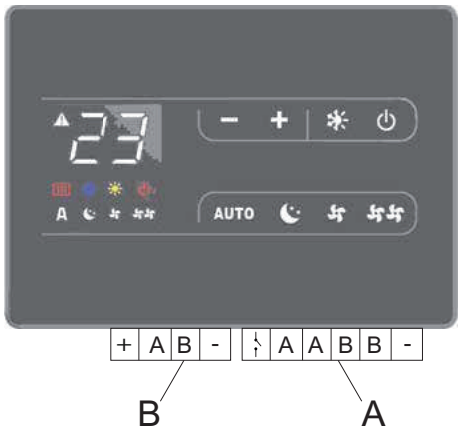

A	ModBus RTU serial connection
B	Fan coil serial

To connect the electronic board to a “Modicon ModBus” RTU serial communication network:
- connect to the terminal block in the wall-mounted controller

⚠ For all other connections, refer to the diagrams and instructions provided in the installation manual.

⚠ The choice of the materials used and the connection path are fundamental for correct operation.

⚠ Use a shielded two-wire cable suitable for an RS485 serial connection, with a minimum wire size of 0.35 mm².

⚠ Keep the two-wire cable separate from the power supply cables.

⚠ Run the cables so that the branches cover the shortest possible path.

⚠ Terminate the line with the 120 ohm resistor supplied.

⛔ Do not use “star” connections.

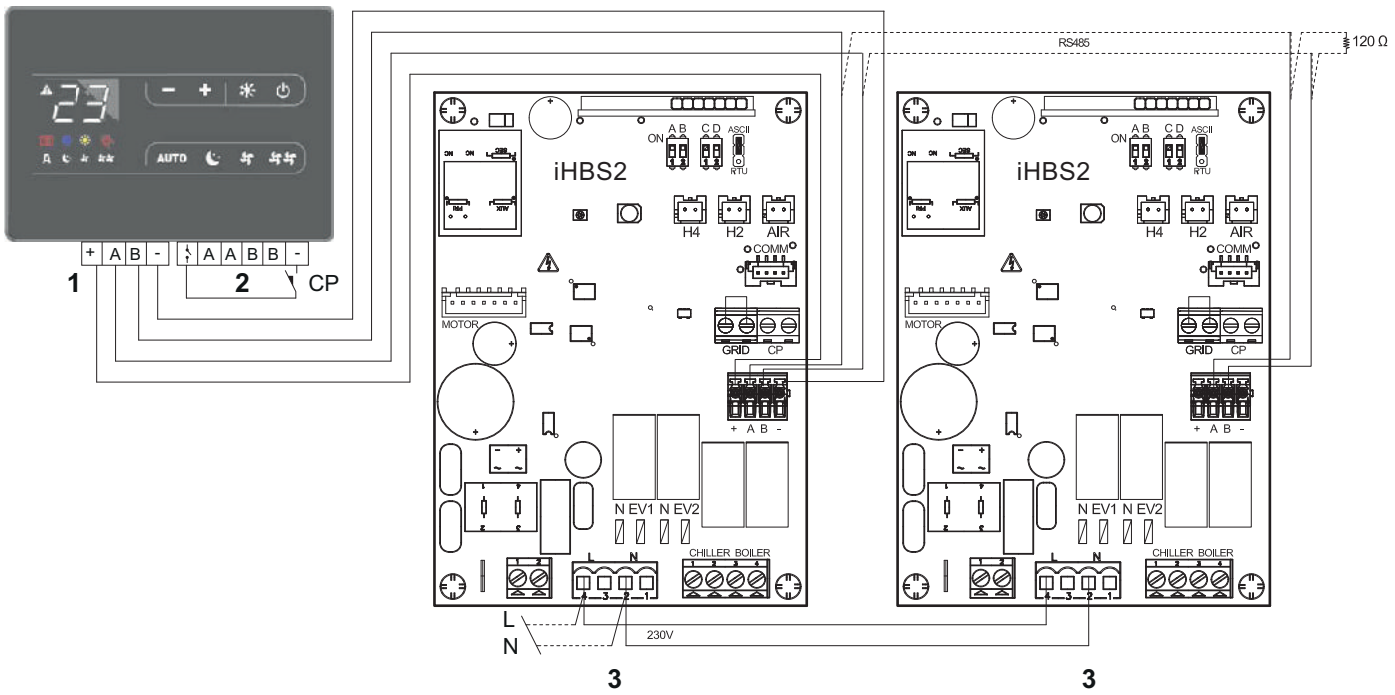

1	Appliance connection terminal block
2	Occupancy contact connection terminal block
3	Electronic board

SERIAL PORT SPECIFICATIONS

Protocol

The serial communication protocol used is “Modicon ModBus” RTU, with the following settings:
- baud rate=9600
- data bits=8
- parity=none
- stop bits=1

The following functions are implemented:
- “03” and “06” for reading and writing a single register respectively
- main control parameters (R/W), temperatures acquired and operating status are made available

PARAMETERS ACCESSIBLE VIA THE NETWORK

Configuration registers

The following table lists the addresses of the control parameters that can be accessed on the iKS2 board and the iKSW2 panel.

The “typ” column specifies whether these registers are read-only (R) or read/write (R/W).

When reading and writing the parameters, the multiplication factor “mlt” needs to be taken into account.

⚠ Respect the limit values!

Reg.	Mnemonic	Limit values	Description	typ	mlt	Std. value
000	T1	0...100.0 °C	Air temperature	R	0,1	-
001*	T2	0...100.0 °C	Hot water temperature H2	R	0,1	-
008	SP	0...100.0 °C	Actual set point (set)	R	0,1	-
009*	OUT	-	Relay output status (see below)	R	Flag	-
015*	MOT_SeT	0...1700	Motor speed (set)	R	1	-
104*	STAT	-	Status flag	R	Flag	-
105	ALR_STAT	-	Alarm flag	R	Flag	-
200	ADR	1...255	Device address (Note 1)	R/W	1	1
201	PRG	-	Configuration flag	R/W	Flag	0
202	SPL	5.0...SPH °C	Minimum set point	R/W	0,1	16,0
203	SPH	SPL...35.0 °C	Maximum set point	R/W	0,1	28,0
209	e_SAvING	0...8.5 °K	Absence offset/standby	R/W	0,1	0
210*	Mvv5	400...Mvv3-4	Minimum speed in MIN and Neutral	R/W	1	400
211*	Mvv4	Mvv5...Mvv2	Maximum speed in Night and minimum speed in AUTO	R/W	1	550
212*	Mvv3	Mvv5...Mvv1	Maximum speed in MIN and minimum in MAX	R/W	1	680
230	MvvP3	Mvv5...MvvP1	Maximum fan speed in MIN (silent) and minimum in MAX with Performance enabled	R/W	1	920
213*	Mvv2	Mvv4...1500	Maximum speed in AUTO	R/W	1	1100
234	MvvP2	Mvv4...1500	Maximum fan speed in AUTO with Performance enabled	R/W	1	1220
214*	Mvv1	Mvv3...1500	Maximum speed in MAX	R/W	1	1500
215*	MvvP1	Mvv1...1700	Maximum speed in MAX with Performance enabled	R/W	1	1700
218*	LLO	0.0...100.0 °C	Minimum water temp. heating	R/W	0,1	30,0
219*	LHI	0.0...100.0 °C	Maximum water temp. cooling	R/W	0,1	20,0
221	ACL	0...32000 hours	Maintenance freq. 0 disabled	R/W	1	0
222	ACL_TIM	0...ACL	Fan operating hour count	R/W	1	-
231	SP	SPL...SHP SPL_W...SPH_W	Absolute set point value (Note 2)	R/W	0,1	20,0
233	Man	0/3 (heat) / 5 (cool)	Auto/manual season changeover	R/W	1	3
242	OS1	-12.0...12.0 °K	Air probe T1 correction	R/W	0,1	0
243*	OS2	-12.0...12.0 °K	Water probe H2 correction	R/W	0,1	0
244*	OS3	-12.0...12.0 °K	Water probe H4 correction	R/W	0,1	0
245	SPL_W	5.0...SPH_W °C	Minimum set point WeB	R/W	0,1	20,0
246	SPH_W	SPL_W...40 °C	Maximum set point WeB	R/W	0,1	24,0
247	WeB	-	Flag for webserver (see paragraph)	R/W	Flag	0

* iKS2 board only

Note 1: The device address can be set individually on the various devices by writing to register 200, or by setting them manually on the iKS2 and iKSW2 keypads.

Note 2: Absolute set point value from 5 to 40. To set the set point, write the value, within the limits of the selected scale.

Configuration and status register flags

Specific flags can be used to set the operating modes, view the controller status and alarms.

PRG function status setting register, address 201

15	14	13	12	11	10	9	8	7	6	5	4	3	2	1	0
-	-	-	-	-	-	-	-	Stby	-	-	LOCK	-	PRG		

- **PRG**: 000 = Automatic; 001 = Silent; 010 = Night; 011 = Maximum
- **LOCK**: 0 = Keypad active; 1 = Keypad locked locally
- **Stby**: 0 = Normal operation; 1 = Unit in standby
- **8-15**: Reserved system flags, do not change the status

OUT relay output status register, address 009

7	6	5	4	3	2	1	0
-	-	-	-	BOILER	CHILLER	EV2	EV1

STAT status flag, address 104

15	14	13	12	11	10	9	8	7	6	5	4	3	2	1	0
0	H4 asnt	H2 asnt	Com err.	Stby	test	alm	Antig	0	B.A.	F.V. H4	F.V. H2			Heat mode	Cool mode

- **Heat mode/Cool mode**: Active mode
- **F.V. H2**: Stop fan for unsuitable water temp. on H2
- **F.V. H4**: Stop fan for unsuitable water temp. on H4
- **B.A.**: Stop unit for incompatible water temp. (unit in standby for 45 minutes)
- **Antig.**: Unit in frost protection mode
- **Alrm**: At least one alarm present
- **test**: Device in test mode
- **stby**: Unit standby
- **Com err**: Master timeout (centralised vers. B32) for 300 sec.
- **H2 asnt**: on boards with probe H2 fitted, the probe is absent at power on
- **H4 asnt**: on boards with probe H4 fitted, the probe is absent at power on

ALR_STAT alarm flag, address 105

15	14	13	12	11	10	9	8	7	6	5	4	3	2	1	0
0	0	0	0	2 AIR M5	Filter	H2 n. id	SW GRL	Mot	Hi Res	H4 n. id	H2	Acq. Dan.	H4	AIR	Com.

- **Com.**: “Blind” version communication error
- **Air**: AIR probe
- **H4**: Probe H4
- **Acq. Dan.**: Shutdown due to unsuitable water temperature
- **H2**: Probe H2
- **H4 n. id**: Unsuitable hot water coil temperature (4-pipe version)
- **Hi Res**: High heater temperature
- **Mot.**: Motor failure
- **GRID**: GRID contact open
- **H2 n. id**: Unsuitable main water coil temperature (2- and 4-pipe versions)
- **Filter**: Maintenance request (dirty filter)
- **2 AIR M5 (M1 control unit only)**: Communication error with fan coil equipped with remote air probe or more than one board equipped with air probe (“E2” displayed)

Advanced functions (register 247)

A number of specific control flags are provided to allow interaction with an advanced supervisor. The flags are grouped into a single register, with read/write access.

⚠ In the event of a power failure, the data is retained.
The selections made by the user are retained even in the event of a power failure, except for “FLAG 7”, which is cleared.

If certain buttons are locked, the ⚠ icon flashes on the display.

FLAG #	Mnemonic	Limit values
FLAG 0 (247.0)	WeB LED OFF	If = 1, the ⚠ icon is always forced off
FLAG 1 (247.0)	Forced off	The unit is switched off and the user is prevented from switching it on. Pressing the ⏻ button causes the ⚠ icon to flash temporarily.
FLAG 2 (247.2)	Disable program rotation	The user is prevented from changing the program. The other buttons maintain their normal functions. When a program button is pressed, the ⚠ icon flashes temporarily.
FLAG 3 (247.3)	Disable selection/deselection of stby program	The user is prevented from switching the unit off and on. Pressing the ⏻ button causes the ⚠ icon to flash temporarily.
FLAG 4 (247.4)	Disable off-scale	The user can adjust the set point in the pre-defined scale. Values outside of the scale 5 to 40 °C are disabled. Pressing SeT+ and SeT- beyond these limits causes the ⚠ icon to flash temporarily. In AUTO mode, the icon does not flash as this is normal control mode.
FLAG 5 (247.5)	Enable set point restriction	The user can adjust the set point in the range SPL_W-SPH_W, while values outside of the range are disabled. Pressing SeT+ and SeT- beyond these limits causes the ⚠ icon to flash temporarily.
FLAG 6 (247.6)	Disable all buttons	The user is prevented from performing any action. The buttons are locked, and when any button is pressed, the ⚠ icon flashes temporarily.
FLAG 7 (247.7)	Bypass WeB restrictions for 1 hour (local/webserver) ⏻ and SeT+ buttons for 5 sec.	The status of this flag corresponds to the user’s selection to bypass the settings sent by the webserver for 1 hour. Condition FLAG 1 to 6 = 1 ⏻ and Set+ buttons for at least 5 seconds. The display shows “nr” (not restricted) for 4 seconds. Action: FLAG 7 = 1 disable FLAGS 1/6 for 1 hour.
FLAG 8 (247.8)	Disable season button	The season button is locked. If the ⏻ button is pressed, the ⚠ icon flashes temporarily.

The set point can normally be adjusted locally within the limits SPL-SPH or SPL_W and SPH_W when Flag 5=1.

To set the set point, write the absolute value, within the limits of the selected scale, for register 231 SP.

DEVICE ADDRESS SETTING

The address of the peripheral (associated with register 200) can be displayed and changed from the iKS2 and iKSW2 controller keypad.

To view and change the address:
- with the panel in standby,
  hold the AUTO button for 5 seconds.
- the address 001 flashes;
  use the + and − buttons to set a value from 1 to 255,
  then press “standby” or wait 10 seconds to confirm the setting

It is recommended to write down the addresses to be used for the individual fan coils, so that these are then easily identifiable once recognised by the system.
Proceed as follows

Fan coil address	Destination
Address 001	Leave free!
Address 002	Kitchen
Address 003	Living room
Address 004	Bedroom 1
---	---

⚠ Do not set fan coils with address 001.
This will allow for any future replacements and/or addition of devices on the network.

TROUBLESHOOTING

Problem	Cause	Solution
The appliance cannot be switched on using the ⏻ button.	The button is disabled and off status has been set by the configuration	Check that Flag 1 of the WEB register (247) is not active
	The CP input on the board is closed	If the E_SAVING register (209) is set to 0, when the CP occupancy contact closes, the board goes into standby. Check the status of the input
The appliance cannot be switched off or the function changed using the ⏻ button	All of the buttons are disabled	Check that Flag 6 of the WEB register (247) is not active
The temperature setting cannot be increased or decreased outside of the set values	A temperature setting range has been defined in the configuration	Check that Flag 5 of the WEB register (247) is not active and, if necessary, change the values of the SPL_W (245) and SPH_W (246) registers

Head Office: M11 - Via Caduti di Cefalonia 1
36061 Bassano del Grappa (VI) - Italy
Tel. (+39) 0424 509 500 - Fax (+39) 0424 509 509
www.climaveneta.com
www.melcohit.com